TECHNICAL DATA SHEET

Burlington®
Yesterday's designs TODAY'S TECHNOLOGY

Anglesey Regent Angled Bath Filler - deck mounted

[T11] Angled Bath Filler (excluding tap heads, bases and unions)
[T18] Deck Mounting unions (for Bath Shower Mixer & Bath Filler, 3/4
[T2] Anglesey tap handles (pair)
[T4A] Regent large pair of tap bases (for Bath taps, Bath shower mixers & Bath fillers - pair)

Product Specification

Finishes Chrome plated
Product Type Traditional
Material Bodies are of all brass construction

Additional Information

Supplied with flow straighter - this is for use with low water pressure
Supplied with aerator - this is for use with high water pressure

System Pressure	.2 bar	.5 bar	1.0 bar	2.0 bar	3.0 bar
with flow straightener*	21.00	21.70	24.20	26.50	28.00
with aerator*	5.40	10.30	11.50	13.60	15.50

* The tap comes with a factory-fitted flow straightener for low pressure water systems. If the water flow is high, replace the factory-fitted flow straightener with the high pressure aerator. Both the aerator and a Neoperl key to replace the flow straightener are supplied with every tap

Guarantee

10 YEAR GUARANTEE

See our website for terms and conditions

Compliance / Approvals
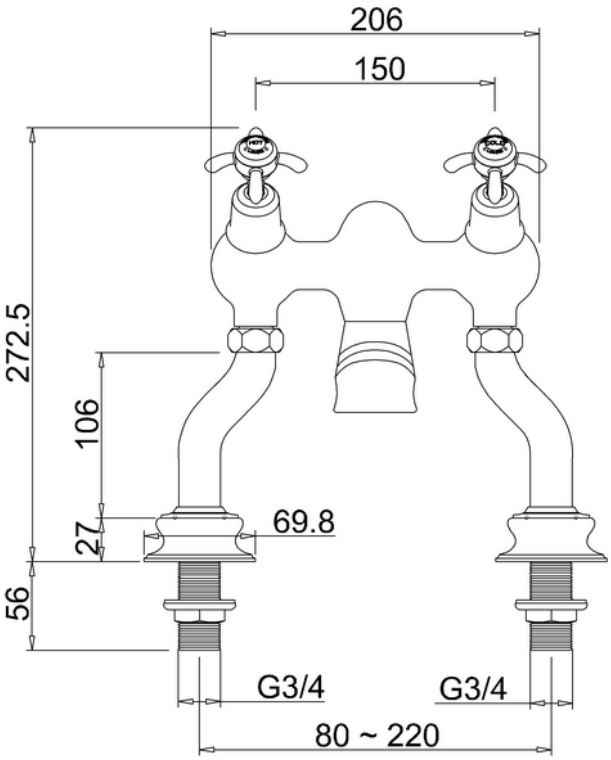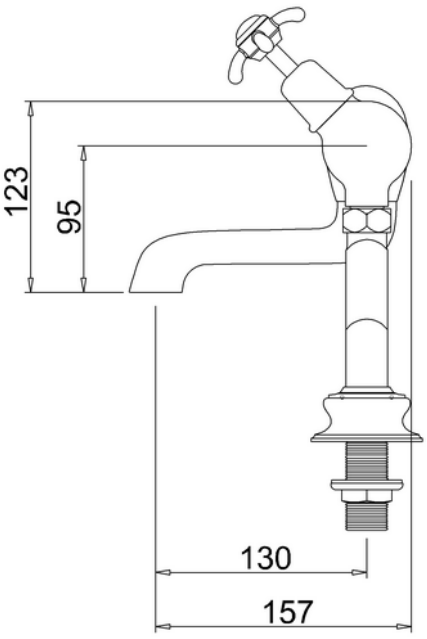
BS 5412:1996
Specification for low-resistance single taps and combination tap assemblies (nominal size ? and ?) suitable for operation at PN 10 max. and a minimum flow pressure of 0.01 MPa (0.1 bar)
BS EN 200:2008
Sanitary tapware. Single taps and combination taps for water supply systems of type 1 and type 2. General technical specification